Experiment–1: A Look at Basic Circuit Theorems in Practice

Introduction to Electronics Laboratory (EC2P001)
Electronics and Communication Engineering Group
School of Electrical Sciences, IIT Bhubaneswar
Autumn Semester 2023

Agenda of the Experiment

In this experiment, we will do the following:

- Set up a circuit to verify Kirchhoff's Voltage Law (KVL).
- Set up a circuit to verify Kirchhoff's Current Law (KCL).
- Set up a circuit to verify the Superposition theorem.
- Set up a circuit to verify Thevenin's theorem.
- Corroborate the experimental findings with analytical results.

What you will Need for the Experiment

Before starting the experiment, ensure that you have:

- Required resistor values– 1 kΩ (×5), 1.8 kΩ (×3), 2.7 kΩ (×2), 3.3 kΩ (×3), 4.7 kΩ (×3), others as needed
- Breadboard (×1) and DC power supplies (×2)
- Digital Multimeter or DMM to measure Voltage/Current
- Connecting wires (but of course!)

If you do not find the exact resistor values, you may choose nearby available values!

Some Features of the Trainer Kit You May Use

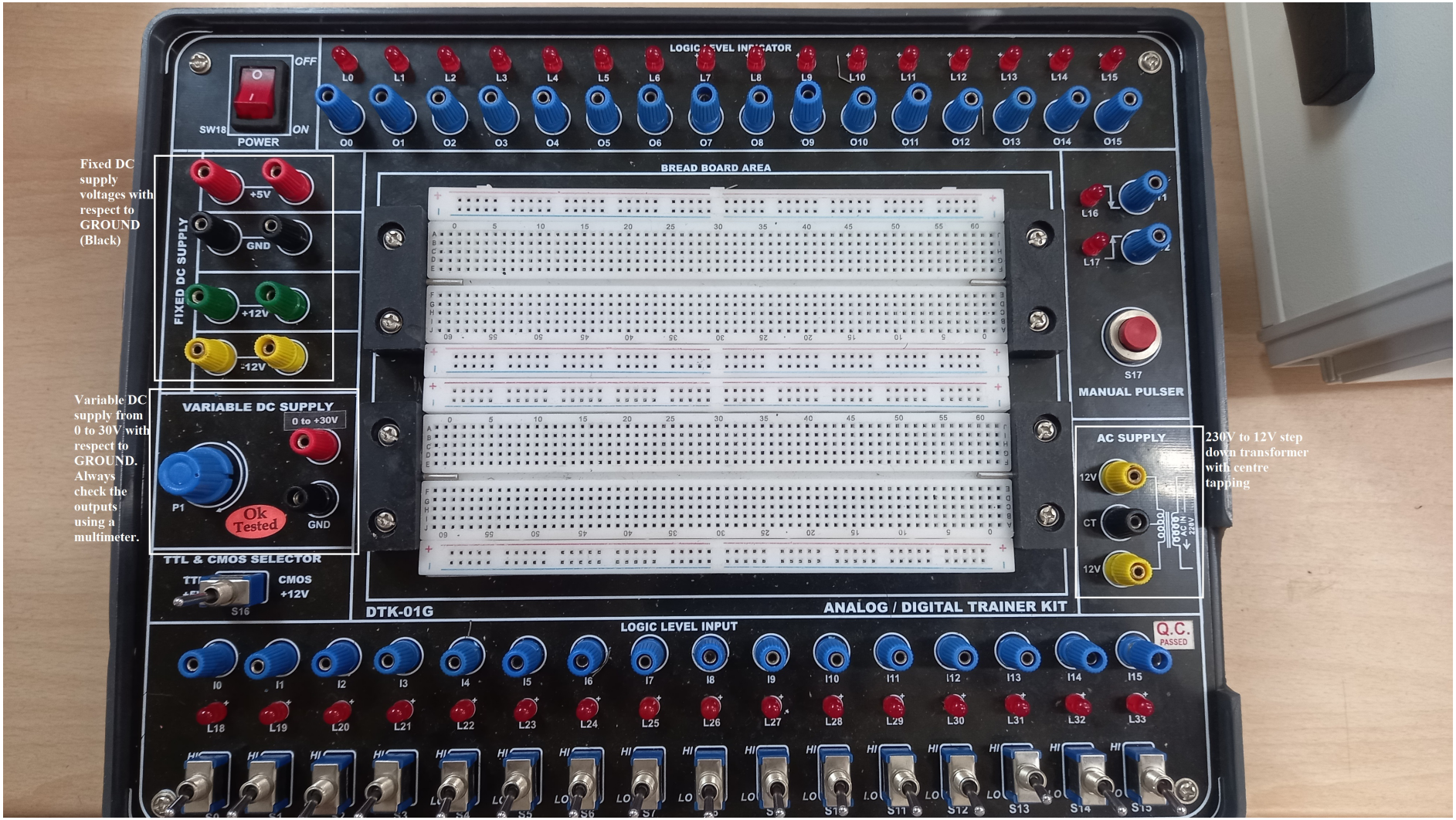

Wait a Minute!

- Before starting the experiment, please take some time to get familiar with the measuring instrument i.e. DMM.
- Watch the introductory YouTube video from 34:15 onwards.
- In particular, learn about its **range**, **resolution** (least count), and **different modes** of measurement for both DC and AC voltages, and **resistance measurement**.
- Please spend at least 10–15 minutes to get familiar with the DMM. Ask the instructor in case of queries.
- **We shall NOT use the DMM in the ammeter mode.**
- The DMM is a versatile instrument that finds applications in almost all areas of academics, research, and industries.

(Image courtesy: www.roadtrafficsigns.com)

Part 1: Kirchhoff's Voltage Law (KVL)

1. Wire up the following circuit on the breadboard.

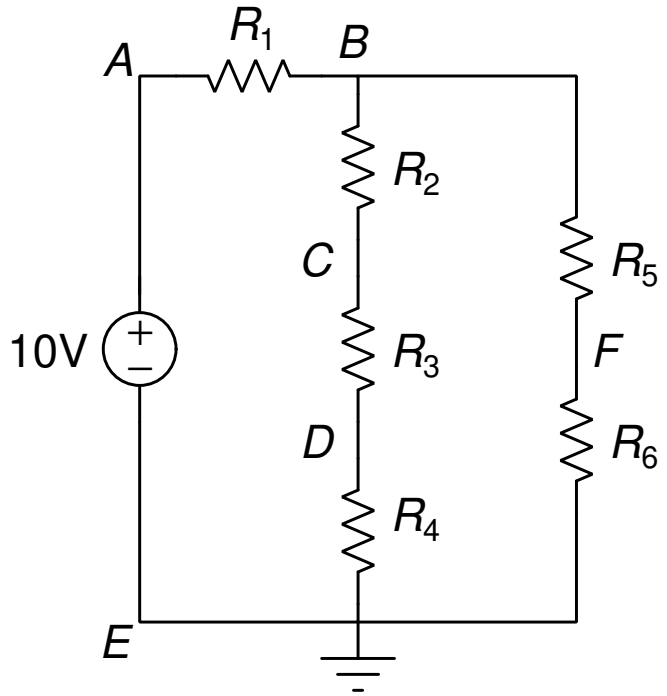

Use $R_1 = 4.7\,\text{k}\Omega$, $R_2 = R_3 = R_4 = 1.8\,\text{k}\Omega$, and $R_5 = R_6 = 2.7\,\text{k}\Omega$.

2. Let's dentify the loops in the above circuit.

Loop–1: $A \rightarrow B \rightarrow C \rightarrow D \rightarrow E \rightarrow A$.

Loop–2: $B \rightarrow F \rightarrow E \rightarrow D \rightarrow C \rightarrow B$.

Loop–3: $A \rightarrow B \rightarrow F \rightarrow E \rightarrow A$.

Part 1: Kirchhoff's Voltage Law (KVL) cont'd..

3. Now, assign a current direction in each loop. Let's assume it is CLOCKWISE. For Loop–1, measure the voltage across each component (resistors and voltage source) using the DMM. **Maintain uniform polarity of the DMM throughout this step.**

   How to ensure this? Let's go back to our assumption of clockwise loop current direction. Since current flows from higher to lower voltage, then say, for R_1, the current will flow from $A \rightarrow B$.

   Using the DMM in the DC voltmeter mode, keep its POSITIVE probe at point A, and the NEGATIVE probe at point B (to obtain V_{AB}), and so on for the other components in the loop. **Make sure to take readings of at least 2–3 decimal places**.

4. Maintain an observation table as follows.

Voltage quantities (V)	V_{AB}	V_{BC}	V_{CD}	V_{DE}	V_{EA}	V_{BF}	V_{FE}

   Calculate the algebraic sum of voltages in each loop and report it.

5. Repeat steps 3 and 4 for Loop–2 and Loop–3.

6. Comment on your observations, in your own words.

Part 2: Kirchhoff's Current Law (KCL)

1. Wire up the following circuit on the breadboard.

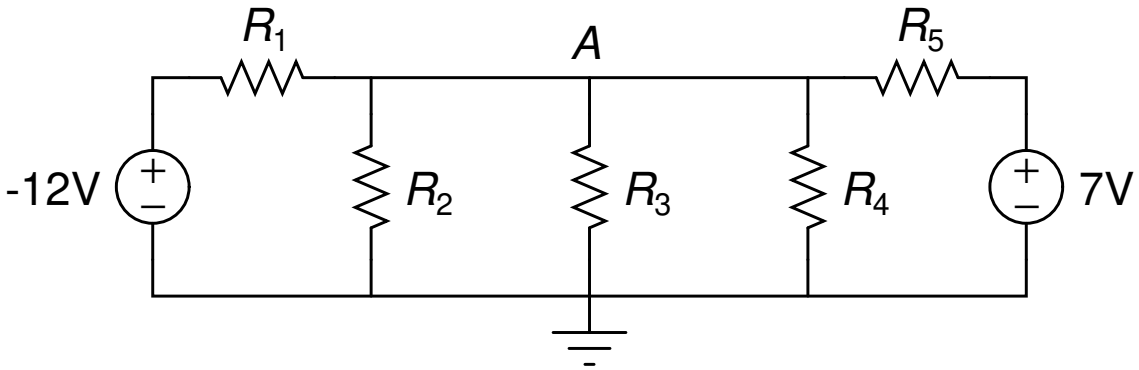

   Use $R_1 = R_5 = 1\,\text{k}\Omega$, and $R_2 = R_3 = R_4 = 3.3\,\text{k}\Omega$. **NOTE:** Use the $-12\,\text{V}$ supply on the kit! **ALL GROUND POINTS ARE KEPT AT THE SAME POTENTIAL.**

2. Consider point A. It is a node as it connects five distinct paths. Assume that in each path, the current flows AWAY from point A.

3. Measure the voltage across each resistor, with the DMM POSTIVE probe at Point A. The branch currents are simply the voltages divided by the _____.

Voltage quantities (V)	V_{R_1}	V_{R_2}	V_{R_3}	V_{R_4}	V_{R_5}
Current (mA)	$I_{R_1} =$	$I_{R_2} =$	$I_{R_3} =$	$I_{R_4} =$	$I_{R_5} =$

4. Calculate the algebraic sum of all currents, and comment on your observations. **Do not dismantle this circuit.**

Part 3: Finding Current using Superposition Principle

1. In this part, we shall re-use the circuit in the previous part (Part 2). **The aim is to measure the current through resistor R_3.**
2. First, disable the -12 V source. You can disable a voltage source by disconnecting it from the circuit, and replacing it with a short circuit i.e. a wire.

   WARNING: Do not short circuit the DC source terminals! It can cause serious damage.
3. Measure the voltage across R_3 under this condition, and calculate the current through it. Note it in your Excel sheet as I'_{R_3}.
4. Next, disable the 7 V source. Measure the voltage across R_3, and calculate the current. Note it as I''_{R_3}.
5. Calculate the net current $I_{R_3} = I'_{R_3} + I''_{R_3}$. Verify it with the value of I_{R_3} in Part 2.
5. Comment on your results and observations.

Part 4: Finding Current using Thevenin's Theorem

1. Wire up the following circuit. **The aim is to find the current through resistor R_2.**

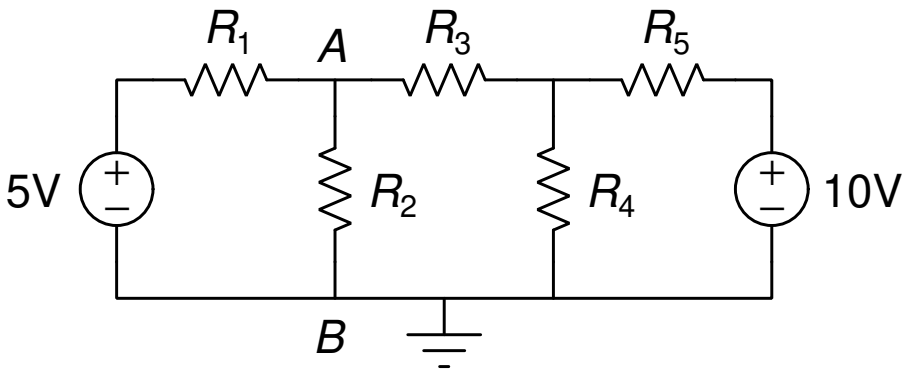

   Use $R_1 = R_3 = R_5 = 1\,\text{k}\Omega$, and $R_2 = R_4 = 4.7\,\text{k}\Omega$.

2. First, measure the voltage V_{R_2} and from this, calculate I_{R_2}. Note this as $I_{R_2}^{ref}$ (reference measurement).

3. Now, disconnect R_2 from the circuit, i.e. there should be an open circuit in place of R_2. Use the DMM and measure the voltage between points A and B. This gives the Thevenin's voltage V_{AB}.

4. Now, deactivate the two voltage sources 5 V and 10 V. Keeping R_2 disconnected, measure the resistance between points A and B using DMM. This gives the Thevenin's resistance R_{AB}.

Part 4: Finding Current using Thevenin's Theorem (cont'd..)

5. Now, calculate and note the current through R_2, as $I_{R_2}^{calc} = \dfrac{V_{AB}}{R_{AB} + R_2}$. Compare $I_{R_2}^{calc}$ with $I_{R_2}^{ref}$.

6. Now choose a **single resistor** available in the lab having value closest to R_{AB} that you have measured in step 4, and make the following NEW circuit. **DO NOT** use multiple resistor combinations to realize the value of R_{AB}.

   Adjust the DC voltage source V_{AB} such that its value is closest to what you measured in step 3.

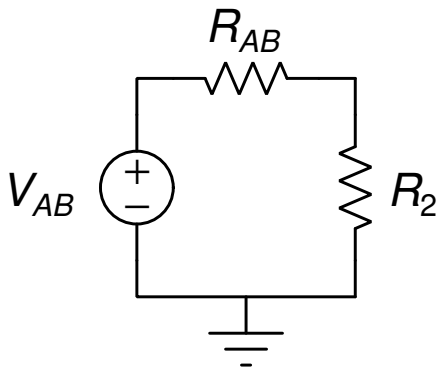

   Obtain the current through R_2 (by measuring V_{R_2}), and note it as $I_{R_2}^{meas}$. Compare this with $I_{R_2}^{calc}$ and $I_{R_2}^{ref}$.

7. Comment on your observations.

What Your Report Should Contain

- All measured currents and voltages for the different parts of the experiment.
- Currents and voltages calculated theoretically.
- A brief note on how to use the DMM optimally for voltage and resistance measurements.
- Analytical calculations and comparisons as asked for.
- Comments on your observations/results– a brief explanation in your own words of your understanding of the experiment and why it works/does not work. If there is any mismatch between expected and observed results, the same should be explained.
- Answers to any other questions asked in the labsheet.